National Coupling Inc.

1316 Staffordshire Road • Stafford, Texas 77477
281-499-2583 • www.nationalcoupling.com • info@nationalcoupling.com

NATIONAL COUPLING

*REGISTERED TRADEMARK
*PATENTED

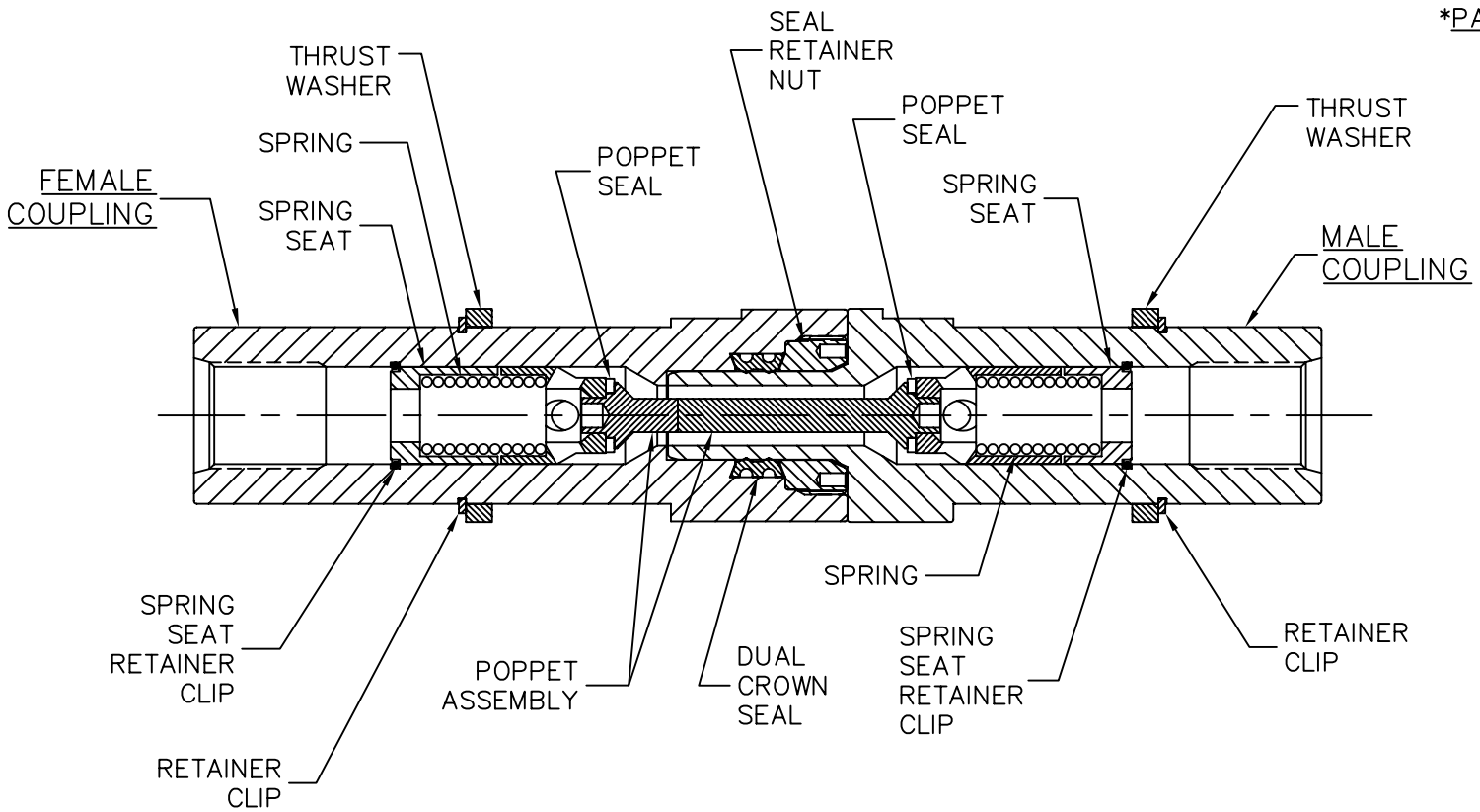

UNLESS OTHERWISE SPECIFIED DIMENSIONS ARE IN INCHES TOLERANCES ARE: 1 PLACE ± .1 2 PLACE ± .01 3 PLACE ± .003 ANGULAR ± 0° 30' BREAK ALL CORNERS .005 TOOL RADIUS .015 DEFAULT SURFACE FINISH 63√ CONCENTRICITY .003 DO NOT SCALE DRAWING THIRD ANGLE PROJECTION	THIS DOCUMENT IS THE PROPERTY OF NATIONAL COUPLING CO., INC. IT SHALL NOT BE REPRODUCED, DISCLOSED OR USED, IN WHOLE OR IN PART, BY ANY PARTY WITHOUT PRIOR WRITTEN AUTHORIZATION BY NATIONAL COUPLING CO., INC. DRAWN BY: JS DATE: 07 NOV 08 APPROVED BY: CR DATE: 15 NOV 08 MATERIAL: SEE DATA SHEET RFQ / ECR NUMBER: –	AS–8 COUPLING ASSEMBLY PLATE MOUNTED DRAWING NUMBER: AS–8–ASSY REV A